Round 2 - Friday, May 20, 2022

SHOTLINK

AdventHealth Championship

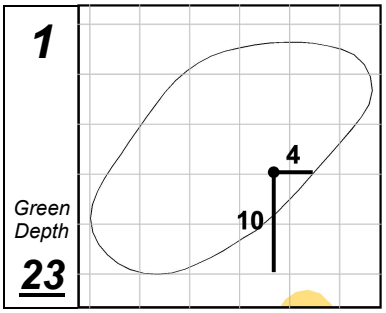

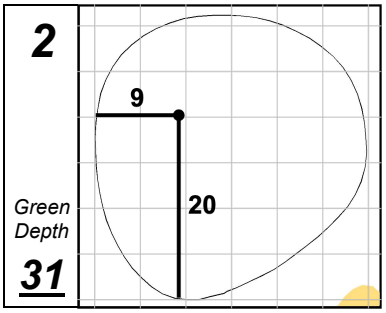

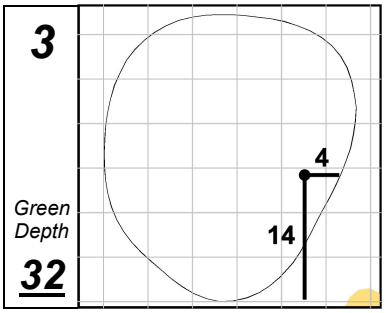

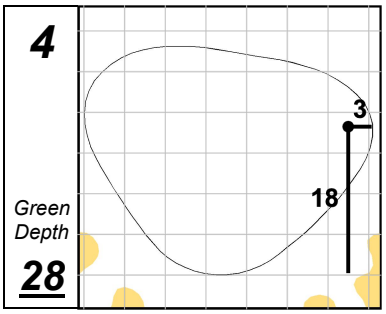

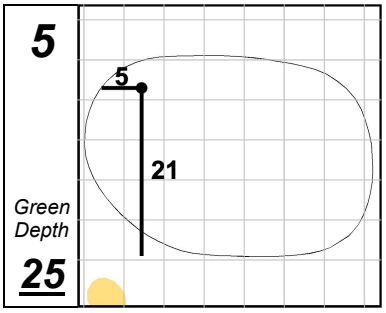

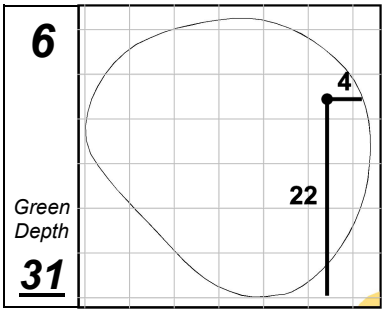

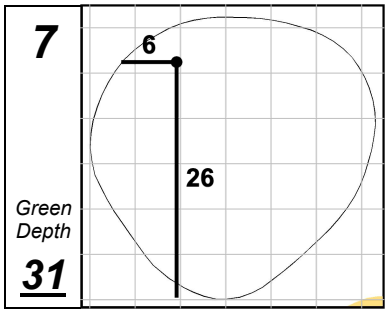

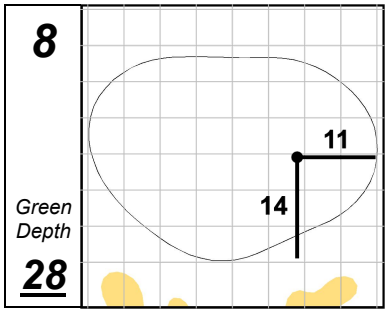

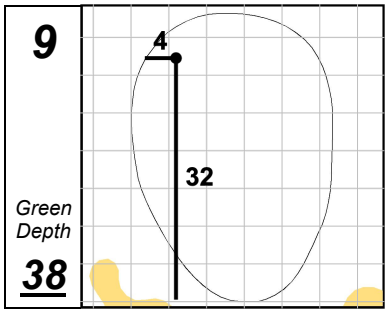

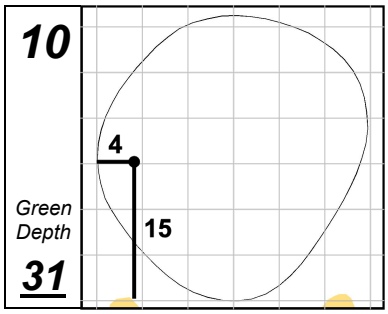

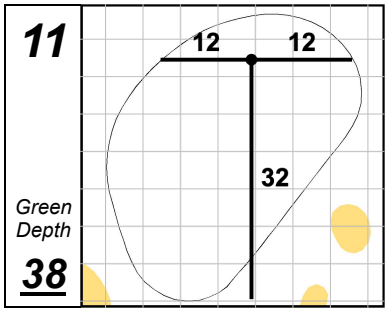

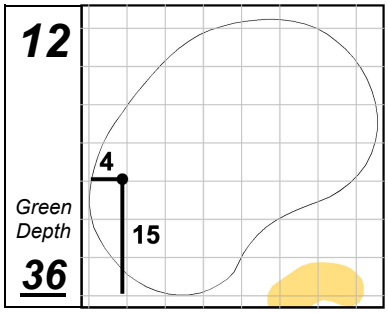

Blue Hills Country Club

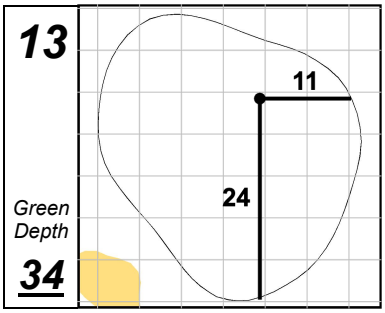

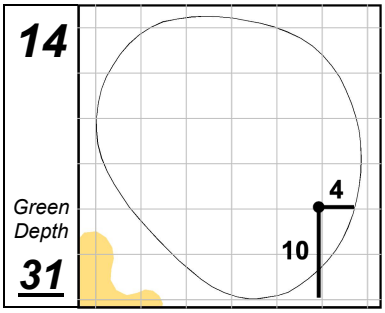

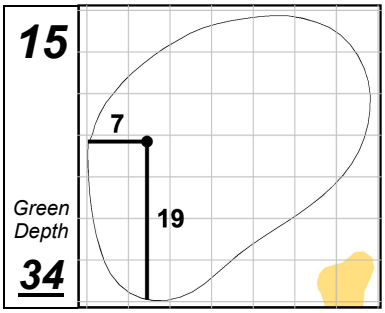

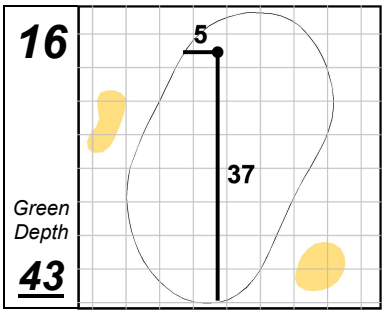

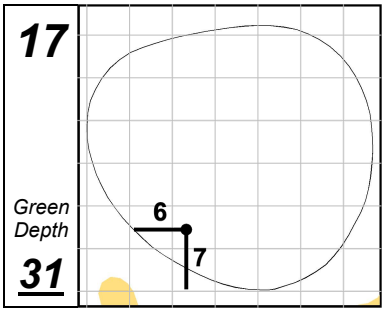

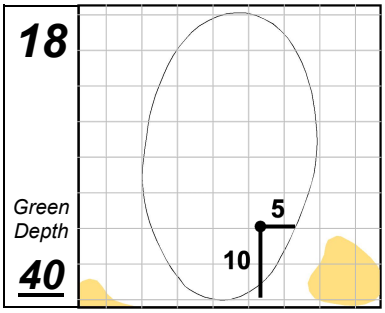

Each side of a complete square on the green represents 5 YARDS.

Thursday, May 19, 2022 10:45:12 AM